JISEA Joint Institute for Strategic Energy Analysis

The Joint Institute for Strategic Energy Analysis is operated by the Alliance for Sustainable Energy, LLC, on behalf of the U.S. Department of Energy's National Renewable Energy Laboratory, the University of Colorado-Boulder, the Colorado School of Mines, the Colorado State University, the Massachusetts Institute of Technology, and Stanford University.

A Combined Nuclear and Renewable Solution to Decarbonizing the Electric Sector

Collaborators: National Renewable Energy Laboratory (PI – Paul Denholm; Charles Kutscher)
Colorado School of Mines (PI – Jeffrey King) University of Wisconsin-Madison (Paul Wilson)

Project Description

Both renewable and nuclear energy have been proposed as methods of decarbonizing the electric sector. However, as currently deployed, these technologies are somewhat mutually exclusive. Wind and solar require a highly flexible grid, while nuclear power plants as currently deployed in the U.S. are rarely cycled -- cycling power plants reduces their energy production and increases costs. One pathway for increasing the technical and economic compatibility of these energy sources is to couple high-temperature nuclear reactors to thermal energy storage, which would allow them to provide load following and cycling duty without substantial economic penalties. This project provided a preliminary analysis of combinations of wind, solar, and nuclear that can provide a large fraction of a system's electricity, along with the characteristics of high-temperature nuclear power plants needed to support these scenarios.

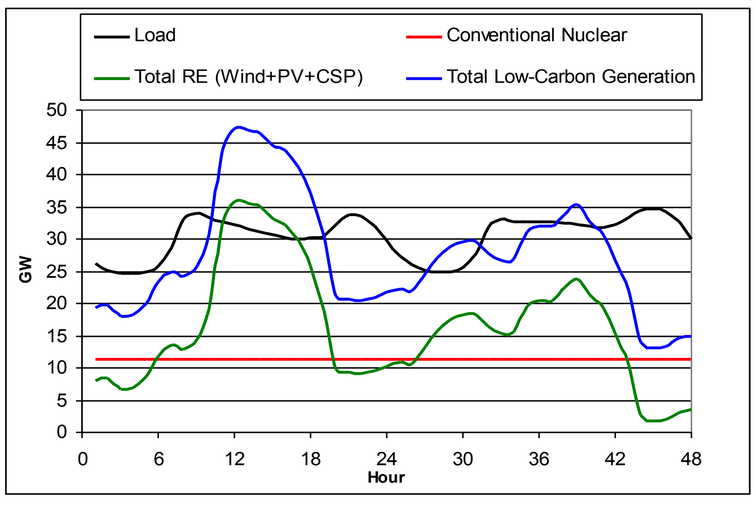

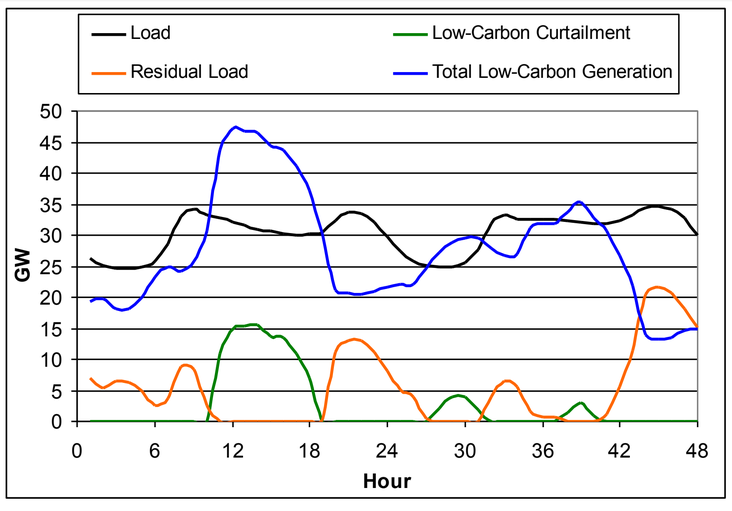

Figures illustrating a mix of RE and conventional nuclear during 48 hours in the spring. Strong solar production in the middle of the day and strong wind production during the evening exceeds demand for energy during three periods. This would result in curtailed energy increasing system costs. Residual load would typically be met with other generation sources, potentially including gas-turbines limiting contribution of low-carbon sources. Electricity storage could be used to move energy over time, allowing a greater contribution, but incurring significant losses, typically exceeding 20% of energy placed into storage.

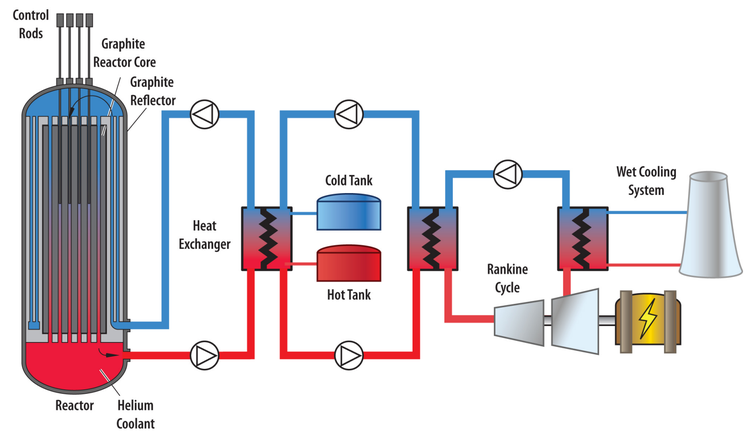

Figure illustrating a potential advanced nuclear design incorporating thermal energy storage

Accomplishments and Current Status

Analysis was completed and presented at the JISEA workshop on nuclear/renewable synergies in August 2011. The analysis was also published in "Energy Policy" (in press as of Feb 2012).

Key elements of the analysis included:

- Simulated ERCOT (Texas) grid with many combinations of wind, solar, and load-following nuclear to indentify technically feasible systems with low levels of curtailment
- Identified potential reactor designs compatible with high-temperature thermal storage
- Identified key research needs for the deployment of high-temperature reactors compatible with thermal energy storage
- Identified key challenges in coupling high temperature reactors to thermal energy storage, including regulatory and licensing challenges
- Identified thermal energy storage media designs compatible with high-temperature thermal storage.

Expected Outcomes and Applications

The study will raise awareness of the need for increasing the compatibility of nuclear and renewable energy if both technologies are to be deployed for addressing climate change.

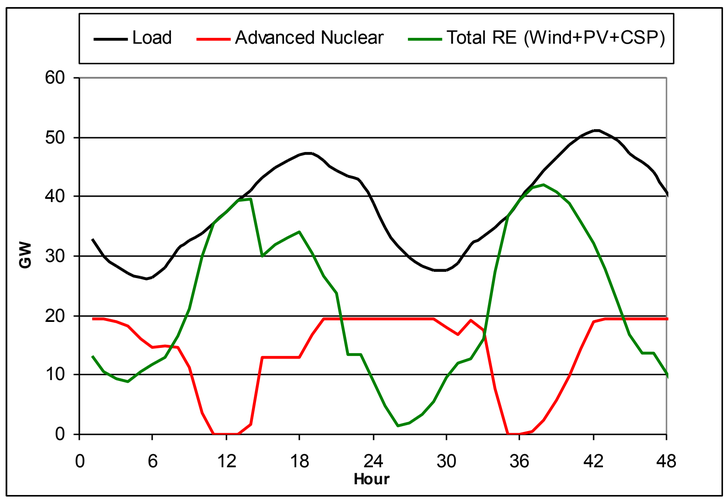

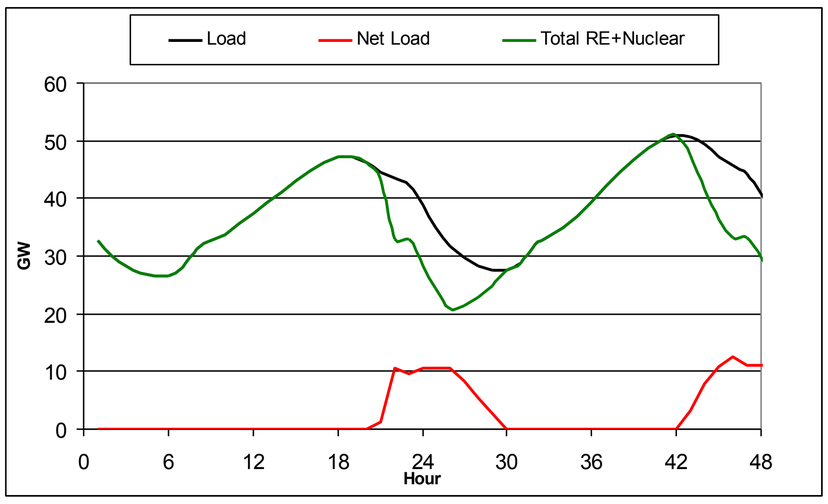

Figures illustrating the use of thermal energy storage to shift nuclear generation (and CSP generation) to improve matching of generation supply and demand. While the nuclear thermal output remains constant, it can be coupled to an oversized power block which cycles extensively to follow the net demand. Curtailment has been eliminated in this 48-hour period, and residual load has been greatly reduced.

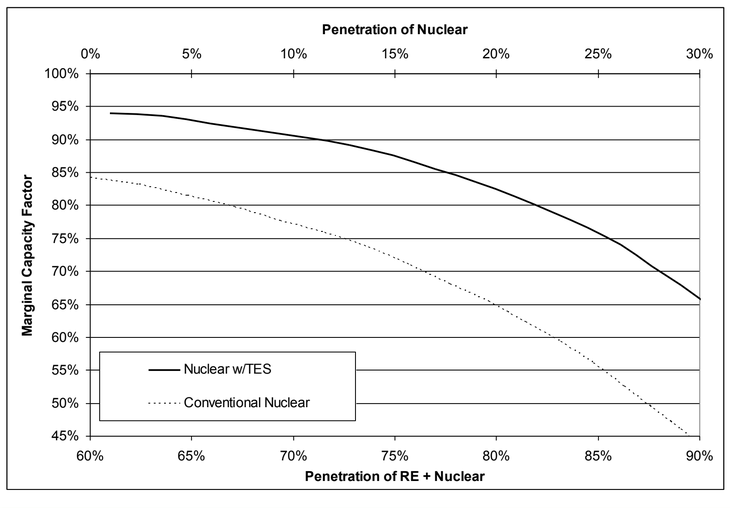

Figure illustrating the difference in capacity factor of a conventional and advanced nuclear plant (with TES) in a high renewable scenario.

JISEA Joint Institute for Strategic Energy Analysis

Joint Institute for Strategic Energy Analysis
1617 Cole Blvd.
Golden, CO 80401-3393

Contacts
Paul Denholm paul.denholm@nrel.gov
Jeff King kingjc@mines.edu
Chuck Kutscher chuck.kutscher@nrel.gov
Paul Wilson wilsonp@engr.wisc.edu